BULK LIQUID OXYGEN, NITROGEN AND ARGON STORAGE SYSTEMS AT PRODUCTION SITES

AIGA 031/13

Revision of AIGA 031/06

Asia Industrial Gases Association

3 HarbourFront Place, #09-04 HarbourFront Tower 2, Singapore 099254
Tel : +65 6276 0160 • Fax : +65 6274 9379
Internet : http://www.asiaiga.org

AIGA 031/13

BULK LIQUID OXYGEN, NITROGEN AND ARGON STORAGE SYSTEMS AT PRODUCTION SITES

Disclaimer

All publications of AIGA or bearing AIGA's name contain information, including Codes of Practice, safety procedures and other technical information that were obtained from sources believed by AIGA to be reliable and/ or based on technical information and experience currently available from members of AIGA and others at the date of the publication. As such, we do not make any representation or warranty nor accept any liability as to the accuracy, completeness or correctness of the information contained in these publications.

While AIGA recommends that its members refer to or use its publications, such reference to or use thereof by its members or third parties is purely voluntary and not binding.

AIGA or its members make no guarantee of the results and assume no liability or responsibility in connection with the reference to or use of information or suggestions contained in AIGA's publications.

AIGA has no control whatsoever as regards, performance or non performance, misinterpretation, proper or improper use of any information or suggestions contained in AIGA's publications by any person or entity (including AIGA members) and AIGA expressly disclaims any liability in connection thereto.

AIGA's publications are subject to periodic review and users are cautioned to obtain the latest edition.

ASIA INDUSTRIAL GASES ASSOCIATION
3 HarbourFront Place, #09-04 HarbourFront Tower 2, Singapore 099254
Tel: +65 62760160 Fax: +65 62749379
Internet: http://www.asiaiga.org

Table of Contents

Amendments to AIGA 031/06

Section	Change
	Complete rewrite as a harmonised project

1 Introduction

As a part of a programme of harmonization of industry standards, this publication has been prepared by a group of industry experts representing major industrial gas companies and is based on the technical information and experience currently available to the authors. This publication is intended as an international harmonized standard for the worldwide use and application by all members of the Asia Industrial Gases Association, AIGA, the Compressed Gas Association, CGA, the European Industrial Gases Association, EIGA and the Japanese Industrial and Medical Gases Association, JIMGA. The regional editions published by each organization have the same technical content however there can exist editorial changes primarily in formatting, units used and spelling. Also references to local regulatory requirements can be different.

The increase in recent years in the size and production capacity of air separation plants has led to a corresponding increase in the capacity of cryogenic liquid storage installations at production sites. It has therefore become more important to consider at the design stage the potential hazards associated with liquid products, the consequences and effects on the local environment of a major release of liquid and the preventive measures required.

This document is intended for the guidance of those persons directly associated with the design, installation, operation and maintenance of bulk cryogenic liquid storage systems. It does not claim to cover the subject completely but gives advice and should be used with sound engineering judgement. The intent of this guide is to ensure that a minimum, uniform level of safety is provided throughout the industrial gas industry for the protection of the public and industry employees.

The information presented does not supplant, but is intended to complement national and local regulations and codes of practice such as the British Compressed Gases Association documents, (BCGA) CP20 *Bulk Liquid Oxygen Storage at Production Sites* and CP22 *Bulk Liquid Argon or Nitrogen Storage at Production Sites* [1,2].

This document presents recommendations to reduce the possibility of large releases of stored cryogenic fluids from a storage system through installation of protective equipment and instrumentation, equipment inspection and testing, and storage system design criteria.

It is the intent of this document to emphasize prevention of releases. However this document provides basic information about mitigation of releases even if they are remote.

All new storage installations shall comply with this document. Application of this guide to existing installations is an individual company or storage system owner's decision.

2 Scope

A bulk liquid storage installation is defined, for the purpose of this document, as the total fixed assembly of liquid storage tank(s) integrated with other equipment, such as pumps, filling equipment, pressure build-up vaporizers, controls and other related ancillary equipment that are connected to it.

This document specifically covers storage installations on production sites where the storage tank is flat bottom constructed and is connected to the production process plant and the individual tank capacity exceeds 125000 litres. For storage installations made with vacuum insulated tanks or cluster tanks or where the tanks have an individual capacity less than 125000 litres it is an individual company or storage system owner's decision to use the present document as a guide for the general requirements of the installation.

The facilities for filling road tankers or rail vehicles are not specifically covered in this document, although its provisions can generally be applied to the liquid storage part of the fill installation. Specific requirements for loading systems can be found in the document AIGA 085 *"Liquid Oxygen, Nitrogen and Argon Cryogenic Tanker Loading System Guide"* [3].

Other storage installations usually found in production plants (for example a nitrogen tank for instrument air and seal gas back-up system) as well as the process systems of the production plant

(such as compressors, heat exchangers, distillation columns, etc.) are specifically excluded from the scope of this document.

3 Definitions

3.1 Terminology

- **"**Shall" is used only when procedure is mandatory. Used wherever criterion for conformance to specific recommendation allows no deviation. Shall can be used in text of voluntary compliance standards;
- "Should" is used only when a procedure is recommended;
- "May" and "Need Not" are used only when procedure is optional;
- "Will" is used only to indicate the future, not a degree of requirement;
- "Can" indicates a possibility or ability.

3.2 Freeboard:

Height above the maximum operating liquid level to the top of the shell.

4 General hazards

Gaseous oxygen is colourless, odourless and tasteless; it is non-toxic; it is slightly denser than air. It is not flammable but vigorously supports combustion.

Breathing pure oxygen at atmospheric pressure is not dangerous although exposure for several hours can cause temporary functional disorder to the lungs.

Nitrogen and argon gases are colourless, odourless and tasteless. Nitrogen and argon are non-toxic but do not support life or combustion (inert gases classified as simple asphyxiants).

4.1 Properties of oxygen, nitrogen and argon

		Oxygen	Nitrogen	Argon
Gas density at 1,013 bara and 15°C	kg/m3	1,36	1,19	1,69
Boiling temperature at 1,013 bara	°C	-183	-196	-186
Liquid density at 1,013 bara and boiling temp	kg/l	1,142	0,809	1,396

At ambient conditions one litre of liquid oxygen gives approximately 850 litres of gas, one litre of liquid nitrogen gives approximately 690 litres of gas and one litre of liquid argon gives approximately 830 litres of gas.

Cold gaseous oxygen, nitrogen or argon are heavier than air and can accumulate in pits and trenches.

Additional information can be found in the following CGA publications: CGA G-4.3 *Commodity Specification for Oxygen* [4], CGA G-10.1 *Commodity specification for nitrogen* [5]; CGA G-11.1 *Commodity Specifications for argon* [6].

4.2 Oxygen enrichment or deficiency of the atmosphere

The hazards from oxygen enrichment are explained in AIGA 005 *Fire hazards of oxygen and oxygen enriched atmospheres* [7] and those of oxygen deficiency in AIGA 008 *Hazards of inert gases* [8].

Atmospheric air contains approximately 21% by volume of oxygen. An atmosphere containing more than 23,5% total oxygen shall be considered as oxygen enriched atmosphere.

Many materials, including some common metals, which are not normally flammable in air, can burn in oxygen enriched atmosphere when ignited.

Both nitrogen and argon act as asphyxiants by displacing the oxygen from the atmosphere. Any potential for depletion of oxygen below 19,5% shall be treated as hazardous, and required precautions taken.

4.3 Ice build-up

Pressure safety valves (PSVs), vacuum breakers and vent valves connected to the inner tank can be adversely affected by the formation of water ice deposits and built-up either on the inlet nozzle or at the outlet itself. Typical sources of ice built-up formation are:

- improper purging and drying of the storage tank and nozzles after hydro-testing;
- rain water leakage into the equipment;
- atmospheric air and moisture aspiration during a shutdown or during vacuum episodes.
- backflow of gas from vapour recovery systems which could contain moisture

Such ice built-up can lead to restriction or plugging of the PSVs, vacuum breakers and vents nozzles and outlets. This is critical due to the nature of the low pressure setting of these devices.

4.4 Oil, grease, combustible materials, cleaning and other foreign matter

Most oils, greases and organic materials constitute a fire or explosion hazard in oxygen enriched atmospheres and shall on no account be used for equipment which is intended for oxygen service. Only materials acceptable for oxygen service applications shall be used.

It is important that all traces of degreasing agents are removed from the system prior to commissioning with oxygen. Some agents, such as halogenated solvents, can be non-flammable in air, but can explode in oxygen enriched atmosphere or in liquid oxygen, refer to AIGA 012, *Cleaning of equipment for Oxygen service* [9] on cleaning for oxygen service.

Although neither liquid nitrogen nor argon reacts with oil or grease, it is good practice to apply a reasonable standard of cleanliness, although not as stringent as that required for an oxygen installation. Particular consideration should be given to cleaning nitrogen or argon systems as for oxygen service if it is possible that they could be put into oxygen service in the future.

Good housekeeping practices are necessary to prevent contamination by loose debris or combustibles.

4.5 Embrittlement of materials

Many materials such as some carbon steels and plastics are brittle at very low temperatures and the use of appropriate materials for the prevailing service conditions is essential.

Metals suitable for cryogenic temperatures includes stainless steel and other austenitic steels (such as AISI 304 and 316), 9% nickel steel, copper and its alloys and aluminium.

PTFE (polytetrafluoroethylene) is the most widely used plastic material for sealing purposes in cryogenic liquid service but other reinforced plastics and copper are also used in certain cases.

4.6 Cryogenic temperatures

The products of a cryogenic air separation plant have associated hazards such as:

- Cryogenic injuries or burns resulting from skin contact with very cold vapour, liquid, or surfaces. Effects are similar to those of a heat burn. Severity varies with the temperature and time of exposure. Exposed or insufficiently protected parts of the body can stick to cold surfaces due to the rapid freezing of available moisture. Skin and flesh can be torn on removal;
- Risk of frostbite or hypothermia (general body and brain cooling) in a cold environment. There can be warning, in the case of frostbite, while the body sections freeze. As the body temperature drops, the first indications of hypothermia are bizarre or unusual behaviour followed, often rapidly, by loss of consciousness;

- Respiratory problems caused by the inhalation of cold gas. Short-term exposure generally causes discomfort; however, prolonged inhalation can result in effects leading to serious illness such as pulmonary oedema or pneumonia; and
- Cold gases are heavier than air, will tend to settle and flow to low levels, and can create a dense water vapour fog. Depending on topography and weather conditions, hazardous concentrations, reduced visibility, or both can also occur at considerable distances from the point of discharge.

For further details see CGA P-12, *Safe Handling of Cryogenic Liquids* [10].

4.7 Perlite

Perlite is commonly used for the insulation of storage tanks. Perlite is a natural volcanic mineral that can be expanded by heating to form very lightweight, porous, odourless, non-flammable, non-toxic silicate powder. It is a highly effective insulating material used to reduce refrigeration losses or heat leak into the tank; however, the nature of the material and the large quantities involved require the use of specific operating, handling, and safety procedures.

Perlite is lightweight and becomes airborne very easily. If perlite enters the eyes or respiratory tract, it can cause serious irritation. A perlite product can contain crystalline silica, which is considered to be a nuisance dust.

For further details see AIGA 032 *Perlite Management* [11].

5 Storage tank system design considerations

5.1 General

Installations shall be designed, manufactured and installed in accordance with recognized storage tank, piping and building codes and where appropriate in accordance with statutory requirements (including the computation of wind loads and seismic loads if required) and shall comply with the equipment manufacturers and the production site operator's specifications. The selection, design and arrangement of the protection systems shall also be based on an assessment of the risk and consequences of exposure to operating personnel and the general public as a result of a spillage due to a failure.

All equipment and materials for oxygen service shall be oxygen compatible, including the insulation.

5.2 Flat bottom tanks

5.2.1 Description

The typical tank configuration for the storage of Liquid Oxygen, LOX, Liquid Nitrogen, LIN, and Liquid Argon, LAR in flat-bottom tanks is a double wall, single containment type, where the liquid is contained in an inner tank and an outer tank serves to contain the insulation.

Single containment is the type of containment comprising an inner tank and an outer tank which is designed so that only the inner tank is required to meet the low temperature ductility requirements for storage of the product. The annular space between the inner and outer tanks is insulated with perlite and is purged/pressurised with a dry, inert gas (usually nitrogen). It is not designed to contain the cryogenic liquid in the event of leakage from the inner tank.

Flat bottom cryogenic storage tanks are not designed with systems to comply with either double containment or full containment as defined by API 625, *Tank systems for refrigerated liquefied gas storage* [12]. The reasons include:

- the service history of LOX, LIN and LAR flat bottom tanks, the construction material, the contained fluids (dry, clean and non-corrosive),the design and construction carried out to well established and internationally approved design codes, the operating mode without significant pressure and temperature cycles, the prevention measure adopted according to the present publication make the probability of a catastrophic failure of the tank very low;

- LOX, LIN and LAR are neither toxic or flammable;
- the volume of contained product is typically small compared to other storages such as LNG, ammonia and petroleum products;
- there are multiple layers of protection in place such as redundant pressure relief devices, over filling protection and mechanical integrity checks;
- a secondary containment system, (bund wall or dyke) for cryogenic fluids introduces a number of hazards to personnel for the potential creation of an oxygen deficient or oxygen enriched atmosphere

5.2.2 Applicable codes and standards

The design, fabrication, and testing of flat-bottom storage tanks and connected piping shall conform to all applicable national and local regulations.

The industrial gas industry has successfully designed, fabricated and tested flat-bottom storage tanks to the requirements of the code API 620 *Design and Construction of Large, Welded, Low-pressure Storage Tank* [13], including Appendix Q *Low-Pressure Storage Tanks for Liquefied Gases at -325 °F or Warmer*.

Seismic design for storage tanks located at grade is addressed by API 620 Appendix L *Seismic Design of API 620 Storage Tanks*[13]. However Appendix L of API 620 eleventh edition, addendum 3 March 2012, states “Application to tanks supported on a framework elevated above grade is beyond the scope of this appendix”. As such, the seismic design of tanks located on elevated concrete structures needs to establish the accelerations for the combined tank, foundation, ground configuration using site specific response spectrum for the site conditions.

To take account for sloshing movement of liquid the selected design code shall be applied. If there is no requirement for sloshing movement, then the minimum freeboard is as specified in Appendix L of API 620 L.4.2.8 [13].

Piping is usually designed, fabricated and tested in accordance with ASME B31.3 *Process Piping*. [14].

Alternative codes or standards to the above may be used provided that a detailed review has been carried out to demonstrate that an equivalent level of safety exists to API 620 [13] and ASME B31.3 [14].

Alternative codes or standards that have sometimes been used for the design of the tank include BS 7777, Part 4 *Flat bottomed, vertical cylindrical storage tanks for low temperature service*, [15] EN 14620 *Design and manufacture of site built, vertical, cylindrical, flat-bottomed steel tanks for the storage of refrigerated liquefied gases with operating temperatures between 0°C and -165°C* [16] or DIN 4119 *Above-ground cylindrical flat-bottom tank structures of metallic materials* [17] in its latest edition.

None of these codes or standards include any reference for the verification of inner vessel to external pressure but a design method can be found in AD 2000 Merkblatt B6 *Cylindrical shells subjected to external overpressure* [18] or DIN 18800 *Structural Steelwork* [19].

5.2.3 Inner tank

The inner tank shall be fabricated of materials capable of withstanding the cryogenic temperature, the internal pressure of the stored fluid. In addition any materials used shall be compatible with oxygen when in LOX service. The preferred material is austenitic stainless steel for its larger margin between tensile stress and yield stress and the consequent better resistance to fatigue compared to 9% nickel steel. Aluminium shall not be used for the field fabrication of the inner tank due to the difficulties of their welding procedure.

The design of the inner tank shall consider the most critical combination of:

- minimum and maximum design internal pressure;
- maximum product hydrostatic load;
- insulation load due to its compaction;
- external pressure;
- thermal stresses, in particular due to the inner tank cool-down
- foundation settlement loads;
- pipe and concentrated loads;
- seismic loads, and
- any other load required by the applicable code, national or local regulation.

Cryogenic spillage due to the major failure of a flat-bottomed storage tank is one of the worst case scenarios of air separation plant risks. In case of extreme overpressure it shall be ensured that the weakest point of the inner tank is not at the bottom cylindrical seam.

The need to prevent a rupture by overpressure at the bottom of the inner tank is identified in the various available codes. API 650 *Welded steel tanks for oil storage* [20] talks of a frangible joint between the roof and the shell and gives it as a possible purchaser requirement. API 620 [13] establishes a link between the sizing of the anchorage straps and the design of the roof-to-shell junction. BS 7777 [15] explicitly states that the weakest point of the structure shall not be at the bottom and present it as a further increase in safety. None of the three codes describe how to design and manufacture a frangible joint so that it will break as intended.

If the design code allows, an alternative to having a frangible roof could be the installation of a limited size frangible piece such as a rupture disc with a large flow capacity protecting the tank at a predictable value. This value shall be defined so that the rupture disc will burst before inducing stresses higher than the maximum allowable stresses of the vessel parts in contact with the liquid at exceptional loading cases that can lead to tank rupture.

Any manway installed under the liquid level shall be fully welded after completion of fabrication.

Self-supporting roof designs shall be in accordance with API 620 [13] or an approved alternative design code. Tank roof designs using a reinforced membrane design that is not covered by API 620 [13] are acceptable. However an inner tank reinforced membrane roof design shall not strengthen the shell to roof joint (compression ring). It is intended for the compression ring to fail in preference to the anchors.

5.2.4 Outer tank

The outer tank shall be designed to support the annular space insulation material and the gas purge pressure but it is not required to be fabricated with materials capable of withstanding the cryogenic temperatures of the stored fluid. The outer tank is usually made of carbon steel.

As a minimum the outer tank shall be designed to resist the minimum wind and seismic loads required by national codes for the installation site. External loads such as snow and ice and mechanical loads such as stairs, platforms, and ladder shall be considered in the design of the system.

Provision for tightness should be considered to prevent corrosion by excluding moisture between the bottom of the outer tank and the foundation.

5.2.5 Annular space purge/pressurising gas

Main safety concerns about annular space are the following:

- If air is present in the annular space of LIN or LAR storage tanks, components of the air with a dew-point temperature above that of the stored contents can condense;
- Accumulation of condensed fluids in the annular space can lead to cooling of the outer tank to a point where the outer tank could fail;
- The condensed fluid can become oxygen enriched and can include atmospheric contaminants such as hydrocarbons. A rapid reaction between the accumulated hydrocarbon contaminants and the condensed oxygen-enriched fluid can occur and result in an energy release within the

annular space. A rapid reaction can also occur with the insulation or other materials in the annular space that are not compatible with the oxygen-enriched fluid;

- If there is some cryogenic liquid trapped in the annular space, a pressure increase can occur due to rapidly expanding liquid to gas by vaporisation during warming of the tank;
- A failure of the annular space piping components and insulation system can occur if an annular space purge or pressurising gas is not maintained because atmospheric moisture and carbon dioxide in the air could freeze on cold surfaces causing for example a restriction in free movement of piping.

Therefore annular spaces of flat-bottomed storage tanks should be purged immediately after perlite filling has been completed. Before cooling down the inner tank, the annular space shall be continuously pressurised or purged with a dry, inert gas that will not condense or freeze at the operating conditions of the inner tank. Sufficient purge/pressurising gas shall be supplied to ensure a positive pressure is maintained throughout the annular space. Sufficient annular space purge/pressurising gas will maintain the insulation in a dry state, which provides the best insulation qualities. Wet or frozen insulation will increase heat losses and will increase the boil-off rates of the stored material.

A purge/pressurising gas distribution system shall be provided around the complete circumference of the base of the tank in the annular space. This purge/pressurising system shall be designed to prevent insulation from plugging the purge system piping and ensure uniform distribution of gas throughout the annular space. Operation of the system shall ensure that there is positive pressure throughout the annular space.

A pressure or flow-indicating device shall be provided to indicate the presence of pressurising gas in the annular space. An alarm should be provided on the pressurising gas supply to alert the operator in case the purge gas supply is inadequate or too high. As an alternative to the alarm, periodic verification of the presence of the pressurising gas in the annular space shall be performed.

Past incidents have shown that an annular space pressure which is higher than the inner tank pressure can damage the roof and the bottom of the inner storage. The relative movement between inner tank and pipes can lead to rupture of pipe. This can occur:

- after the hydraulic test, if the vessel is emptied without a vent valve being opened;
- if the pressure building system is out of order, and liquid is withdrawn;
- as a result of gas (vapour) condensation when filling tank through top fill nozzles;
- before cool down, if the annular space is pressurized with the empty tank at atmospheric pressure.

5.3 Piping and nozzles

Failure of a liquid nozzle or piping connected to the inner tank can lead to hazardous on-site as well as off-site effects.

Within the annular space all piping joints, including instrument and sample lines, connected to the inner tank shall be welded. All lines penetrating below the maximum liquid level shall be butt welded and the wall thickness shall be selected for the anticipated service conditions. Common practice is to use Schedule 40 or equivalent thickness for these lines, though a different wall thickness may be used following a design review.

No transition joints, flanged or threaded joints, bellows, or flexible metal hoses shall be used in the annular space piping connected to the inner tank.

No piping branch connections shall be located within the annular space of the tank, upstream of the tank's isolation valve (see 5.5). Each branch piping connection made outside of the tank's annular space and upstream of the remotely operated emergency shut-off valve shall be provided with its own manual and/or emergency shut-off valve as required by 5.7.1 and be of all-welded construction up to the emergency shut-off valve.

The risk of liquid nozzle failures is minimised by an inspection of the installation after construction has been completed.

All butt welds in liquid outlet nozzles and related piping up to the isolation valve shall be 100% radiographed. Piping connected to the vapour space shall be tested according to the requirements of ASME B31.3 [14].

Piping and nozzles connected to the inner tank shall comply with the material requirements adopted for inner tank.

5.3.1 Piping stress calculation

The piping design shall take into account thermal expansion and stresses. All lines connected to the inner tank shall be subject to a piping stress calculation.

Lines attached below the maximum liquid level shall follow guidance given in API 620 Appendix Q.3.4 [13] including stress limitations. Lines connected to the vapour space shall comply with ASME code B-31.3 [14] or equivalent local codes and standards.

In the definition of pipe end constraint conditions, lines shall be considered fixed in the translational and torsional directions at the inner tank. At the outer tank the pipe shall be considered fixed in the translational and torsional directions or a flexible connection between the pipe and the outer tank may be used. When a flexible connection is used the stress analysis shall consider both the annular space piping and the external piping as one system.

Piping stress analysis shall take into account the following loading combinations:

- cold line, warm tank;
- warm line, cold tank; and
- cold line, cold tank.

The design and installation of the piping system shall ensure that piping is not pre-stressed prior to tank cool down.

5.3.2 Accumulation of hydrocarbons

For LOX storage tanks the design shall take into account methods to prevent the slow accumulation of hydrocarbons by boiling in dead end connections. Where hydrocarbons can accumulate, safeguards such as periodical purging, liquid traps, thermosyphon pipes shall be used. Particular care shall be paid to spare lines and to intermittent use lines.

This requirement is recommended for storage tanks where a change of product service could occur in the life time of the storage tank.

5.3.3 Piping penetration in the outer tank

Provision shall be made for free movement of connected piping to minimise thrusts and moments applied to the sidewall connection. Allowance shall be made for the rotation of the sidewall connection caused by the restraint of the tank bottom to the sidewall expansion from stress and temperature as well as for thermal and elastic movement of the piping (see 5.27.8 of API 620 [13]).

Where liquid lines exit the outer tank the design of these lines and wall penetrations shall consider the following requirements:

- Flexibility of the line within the annular space shall be ensured either with an expansion loop in the annular space between the inner tank and the outer tank or with an expansion bellows on the outer tank penetration for differential contractions.
- The wall penetrations shall be designed so that they avoid the risk of liquid withdrawal line rupture upstream of the automatic shutoff valve. This can occur due to:
  - differential movement between the outer tank and the inner tank caused by an accidental overpressure of the tank annular space leading to the outer tank shell rising;
  - over pressure of the inner tank which results in lifting of the inner tank.

An anchor point should be included downstream of the automatic shutoff valve to guard against a rupture caused by excessive stress on piping downstream of the shutoff valve. The flexibility of the

line between outer shell connection and fixed point (downstream of the automatic shutoff valve) shall be ensured.

5.3.4 Top filling arrangement

Liquid lines entering into the inner tank above the maximum liquid level and having an air gap above any extension below the maximum liquid level towards the bottom of the tank are not treated as lines connected to the liquid space. If no air gap is provided they shall be treated as connected to the liquid space.

5.4 Tank control and protection

High pressure or vacuum condition in the inner tank, overfill of the inner tank or over pressure in the annular space could cause inner tank failure and release of the stored cryogenic fluid

5.4.1 Inner tank pressure/vacuum monitoring and control

Overpressure and overfill in the inner vessel affects mainly the shell anchorage system, the junction between roof and shell or between bottom and shell depending upon the inner tank design.

The inner tank pressure control system shall include the following:

- An automatic positive pressure control venting system to maintain the pressure at the operating pressure of the inner tank. For determining the design capacity for this positive pressure control system, refer to the normal operating condition cases Qv listed at 5.4.3; An additional requirement for the valve should include the tank cool-down rate.
- If there is the possibility to pull a vacuum beyond the design conditions (for example by high speed withdrawal pumps, sub-cooled feeding) a pressure build-up vaporizer or other equivalent system shall be provided to automatically maintain pressure above the required minimum. For determining the design capacity for this pressure control system, refer to the cases listed in 5.4.4.

The two control systems should be completely independent, each one with its own root valve, pressure transmitter and controller.

The pressure in the inner tank shall be monitored by:

- local pressure gauge and/or remote pressure indicator
- high and low pressure alarms to provide warnings to operating personnel.

Consideration should be given to the installation of a second alarm/trip action:

- a low-low (LL) pressure alarm to provide a further indication to operating personnel
- an interlock triggered by a pressure signal that automatically places the tank in a safe condition.

5.4.2 Inner tank overpressure protection devices

Overpressure relief devices for the inner tank shall include a minimum of two independent in service pressure relief devices set at a pressure no higher than the maximum allowable working pressure (MAWP).The capacity of each device shall be such that if one malfunctions or is removed temporarily for maintenance, the tank is still protected from all overpressure cases considered in the sizing of the pressure relief devices.

This requirement to have a minimum of two independent pressure relief devices can be achieved by any combination of safety valves and bursting discs with individual nozzles connected to the inner tank.

As an alternative to separate nozzles, a single large nozzle (minimum nominal diameter 12 in or 305 mm) connecting to both safety valves can be used. This large connection to the inner tank shall have a diameter larger than the branch connections to the safety valves. A large connection is unlikely to plug. In addition to risk of plugging of a single nozzle, the inlet line pressure drop has to be calculated considering that both safety valves are normally in simultaneous service. Chattering of the pressure relief valves can make the pressure relief valves leak with resulting ice formation and consequent

plugging of the safety valves. The above requirement is especially important if combined pressure-vacuum valves are used, due to the higher risk of moisture entering the inlet nozzle from the ambient air.

Consideration can be given to the installation of a third pressure relief device set at a pressure higher than the MAWP (design pressure). A third relief device further increases the reliability of the overpressure protection

The design of the system should facilitate periodic testing, maintenance, and replacement of the pressure relief devices. The time period with only one operable relief device for inner tank protection should be kept to a minimum. If an isolation valve is used upstream of a pressure relief device then captive key interlock systems, diverter valves or control through management procedures shall be provided so that no more than one pressure relief device can be taken out of operation at a time.

The devices shall be suitable for the prevailing environmental conditions.

5.4.3 Sizing of pressure relief devices

To define the capacity of pressure relief devices all expected operational and upset condition combinations shall be considered. The design relieving flow capacity Qs for each inner tank relief device shall consider the following formula:

$$Qs \geq \Sigma Qv + Qa$$

Where:

ΣQv = the sum of all the flows in normal operating conditions Qv that are expected to be simultaneous

Qa = the highest flow generated by upset conditions

Normal operating scenarios Qv to be considered include:

- normal boil-off rate from ambient heat leak;
- liquid flash and gas displacement from:
  - plant production;
  - cool down of connected equipment such as pumps:
  - pump recycles
  - loading of road trailers and rail tank cars (vapour recovery);
  - unloading road trailers or rail tank cars into the tank;

Upset conditions Qa should include the largest of the following independent upset conditions:

- malfunction of control valves in the pressure control circuit;
- malfunction of control valve in the tank fill line resulting in excess flash and vapour displacement;
- substantial decrease in barometric pressure;
- loss of liquid subcooling in the feed;
- backflow from high pressure downstream piping
- other circumstances resulting from equipment failures that could be unique to the particular installation;
- external fire (for example as stipulated in standard API 2000[21]).

The pressure relief devices to prevent the inner tank from over-pressurization are designed for vapour flow only and are not meant to protect the tank from overfilling. Protection of the tank from overfilling is performed by following the mandatory requirements of 5.4.7.

The system designer should consider the gas temperature at which the relief gas will relieve. Relief valves and burst disks should be sized for relieving cold gas.

The pressure at which the burst disk ruptures is a function of temperature. This is typically ambient temperature.

Installation and sizing criteria for the pressure relief devices for flat-bottomed storage tanks can be referenced in the applicable portions of currently recognized standards such as API 620 [13] and API 2000 *"Venting Atmospheric and Low-Pressure Storage Tanks Non refrigerated and refrigerated [21].* **WARNING**: *Experience has shown that during the lifetime of a plant the operating conditions of storage can change in relation to those at the beginning that had been the basis of sizing the overpressure relief devices. In a few exceptional cases, the result was that the design pressure of the inner vessel or the design capacity of vent valve and relief valve was exceeded. A mandatory management of change protocol such as the one described in AIGA 010 Management of Change [22] is therefore required.*

The pipes and valves connecting to pressure relief devices and the vent piping shall be sized for the flow conditions in accordance with a relevant code such as API 521, *Pressure Relieving and Depressuring Systems* [23]. The vent pipes shall be supported, and designed to prevent blockage by ice and other foreign matter. The vents shall be piped to safe locations.

5.4.4 Inner tank vacuum protection

Flat bottom liquid storage tanks are typically not designed for full vacuum. Consequently at least two vacuum relief devices shall be installed to protect against vacuum. The capacity of each device shall be such that if one malfunctions or is removed temporarily for maintenance, the tank is still protected from all under pressure cases considered in the sizing of the vacuum relief devices.

A combination overpressure/vacuum relief device is typically used for this application.

The calculation of vacuum relieving capacity for the inner tank should consider the worst foreseeable combination of operational and upset conditions such as:

- withdrawal of liquid at the maximum rate;
- maximum vapour withdrawal rate;
- increase in barometric pressure;
- sudden cooling of tank vapour when filling or recirculating liquid through a top fill nozzle;
- other circumstances resulting from equipment failures and operating errors that could be unique to the particular installation.

5.4.5 Outer tank overpressure protection

Overpressure of the annular space can lead to failure of the inner tank. The annular space can be over pressurised from a number of sources including:

- a leak from the internal tank or annular space piping;
- failure of the annular space pressurising system; and
- sudden changes in atmospheric pressure.

It is the responsibility of the system designer to evaluate the maximum flow capacity and the gas temperature to be considered for the sizing of the pressure relief devices, taking into consideration the volume of the annular space, all the normal operating conditions and the maximum upset condition that could occur for the specific installation.

A pressure relief device may be provided for normal venting purposes of the purge gas to control the annular space pressure.

The annular space shall be protected against over-pressurisation by a, spring-loaded relief valve or weighted cover. In the case a weighted cover is used it shall be provided with a retaining device that shall not restrict the capacity of the relief device to avoid the cover from being lost in the case of overpressure or high wind.

These devices shall be installed after the end of the perlite filling operation and should be periodically inspected and cleaned to avoid any choking of the device due to perlite accumulation. If a filter is

placed upstream of the relief device to avoid perlite escaping from the annular space, consideration shall be given to avoiding plugging and excess pressure drop in the system.

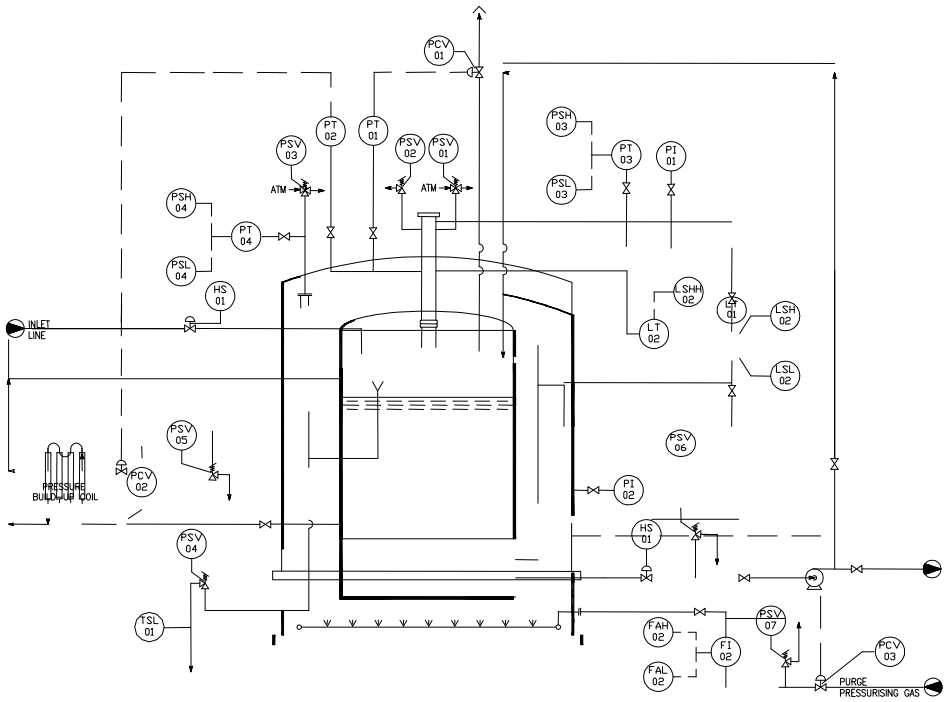

Legend and references to the paragraphs:

PSV01-02: Inner tank overpressure-vacuum protection devices (5.4.2 and 5.4.4)

PSV03: Outer tank overpressure-under pressure protection device (5.4.5 and 5.4.6)

PSV04: Overfilling protection (5.4.7)

PSV05-06: Thermal relief valve

PSV07: Annular space pressurising gas safety valve

PCV01-02: Inner tank pressure control valve (5.4.1)

PCV03: Outer tank pressure control valve (5.2.5)

HS01: Remote operated emergency isolation valve (5.5.1)

LT01-02: Inner tank level measurement devices (5.4.7)

PI: Pressure indicator

PT: Pressure transmitter

Figure1 Outer tank overpressure protection

5.4.6 Outer tank vacuum protection

A vacuum condition can be created in the annular space by rapid cool down of the inner tank or sudden changes in atmospheric conditions.

Vacuum protection of the outer tank shall be accomplished by installing at least one vacuum relief device on the outer tank.

A combination overpressure/vacuum relief device can be substituted for this application while meeting the requirements in point 5.4.5.

Installation and sizing criteria for the pressure devices for flat-bottomed storage tanks can be referenced in the applicable portions of currently recognized standards such as API 620, [13] and API 2000, [21].

5.4.7 Inner tank overfill protection

If overfilled, flat-bottomed tanks can be subject to serious damage or failure resulting in spillage of the tank contents or overflowing liquid.

Filling a flat-bottomed tank to levels above the maximum design level can result in an uplifting, hydrostatic force on the inner tank dome that can cause the failure of a number of components including the inner tank anchor/hold down straps, the inner tank shell to floor joint, or the inner tank shell to roof joint. Therefore, the relief valves do not protect the tank against the overfilling hazard.

On high tank level the overfilling protection device shall be either a high level trip to close the tank filling valves or an overflow line capable of passing the maximum liquid filling rate.

Liquid level measurement not only provides normal operating inventory status, but also input to safety systems to prevent overfilling.

Therefore as a minimum, two independent liquid level measurement devices shall be installed on flat-bottomed cryogenic storage tanks.

Liquid level measurement devices typically include differential pressure indication, liquid float devices, sonic measurement and conductivity devices.

Additionally a temperature detection device in an overflow line may be used to detect the tank is an overfill condition.

Freeboard is required above maximum operating liquid level to satisfy seismic design codes.

Additional freeboard or overflow relief devices could be required to accommodate liquid inventory from an upstream process entering dome roof space in the event in the event of fill line valve failure.

5.4.7.1 Primary measurement device

The primary liquid level measurement instrument shall be used for normal operating indication. The read out shall be accessible to the operator and provide a continuous indication of the tank inventory. This device shall alarm on both low and high levels indicating possible abnormal tank operation. Typical set points could be 5% of full tank contents and falling and 95% of full tank contents and rising. Operator response to the high alarm should be to take appropriate corrective action. The setting of the high alarm shall allow sufficient time for a response following its activation that will prevent the level rising and the high-high level activation.

Minimum level alarm setting shall not be lower than the static head required to avoid the floor from bulging up in the middle caused by annular space pressure and by partial vacuum of the inner vessel.

5.4.7.2 Secondary measurement device

The secondary measurement device, independent of the primary device, shall be installed to detect a maximum operating liquid level and initiate immediate action to automatically isolate the tank to prevent further filling. This device can be of similar construction as the primary liquid level instrument as long as its input signals are not common to the primary device. Temperature detection in an overflow line can only be used as a secondary protection device.

The primary and secondary instrumentation loops may be combined in PLC logic to provide normal operating indication and trip protection using diagnostic functions to improve reliability while maintaining high safety integrity. However this shall only be done after a hazard analysis (such as HAZOP, SIL) to ensure that independence and redundancy is maintained”.

The secondary device shall not be used for normal operating indication but may function as a backup device to the primary indication if desired.

The secondary measurement device shall have a visible/audible alarm to inform the operator that trip has been activated. The operator actions shall be clearly specified and documented including instructions for the operator to verify if liquid flows into the tank have been terminated.

Risk assessments shall be carried out to identify all sources of liquid into the tank including liquid from road trailers or rail tank cars, transfer of liquid from other tanks, etc.

Isolation of all liquid filling sources should be done by closing emergency shut off valves on all lines that can deliver liquid to the tank and by de-energizing any pumps used for transferring liquid into the

tank. In case such transfer pump is used also for other process purposes that could prevent their de-energization, a risk assessment shall be performed and consideration should be given to installing a double isolation valve on the inlet line to the tank. If only one isolating device is provided, the possibility of failure shall be considered.

5.4.7.3 Other considerations

In conjunction with 5.4.7 a protection system based on tank overflow shall direct the liquid to a safe location or direct the overflow to a cryogenic vaporizer.

The overflow disposal area or the size and duty of the vaporiser shall be adequate to allow for expected response time.

5.5 Isolation valves

Each liquid line that connects to the inner tank below the maximum liquid level shall be provided with at least two independent means of isolation. This may be any combination of manual isolation valves and emergency isolation valves Spare nozzles not connected to a process line may only have one isolation valve but they should be provided with a blind flange or a welded cap. Suitable means shall be provided for preventing the build-up of pressure due to trapped liquid or cold vapour between any two isolation valves or between the valve and the cap.

These isolation valves shall be located as close as practical to the outer tank penetration in an easily accessible location. The protection of isolation valves from external damage shall be considered.

Instrument lines or sample lines smaller than 50 mm nominal bore emanating from below the maximum liquid level may have only one isolation valve.

WARNING: *The isolation valves allows for maintenance on downstream components. However maintenance works on the isolation valve itself should be avoided without draining the tank contents due to safety concerns.*

5.5.1 Emergency shut-off valves

All liquid lines of 50mm (2 inch) nominal bore or greater connected to the inner tank below the maximum liquid level shall have an emergency shut-off valve (ESV).

The ESV shall be capable of being remotely operated in emergency situations to isolate spills from failed piping. Such emergency shut-off valve (ESV) is additional to any normal isolating valve required for process operation (for example to isolate a transfer pump). A manual isolation valve should be installed immediately upstream of an externally mounted ESV for maintenance of the ESV.

The remote operated emergency isolation valves may be located externally or internally in the inner tank.

The emergency isolation valves shall restrict the flow of liquid from the tank in the event of a line failure downstream. Each emergency valve shall be reliable and quick acting and be capable of operation under conditions of heavy liquid spillage. The valve shall fail safe in a closed position on failure of operating power or operating fluid supply. The tank pressure or the liquid head shall act to assist the closing of the valve.

The location and design of external, remote-operable shut-off valves shall be located as close as practical to the outer tank penetration. It shall be protected against possible damage from external hazards like vehicle impact, fire or projection of parts or molten materials from failure of pumps or other equipment. Hazards associated with the presence of liquid oxygen pumps are addressed in the AIGA 055, *Installation Guide for stationary electric motor driven liquid oxygen centrifugal pumps* [24].

On inlet piping entering below maximum liquid levels check valves designed with the capability for testing (Figure 2) can be used in place of external remote operated emergency isolation valves. Liquid spills from storage tank inlet line failures can be eliminated by designing the liquid inlet nozzle to be in the vapour space of the tank with a siphon break provided in the design. Inlet line failures using this design will result in a release of cold gas rather than a cryogenic liquid. Releases of cold gas from a failed inlet line will allow operators to safely initiate closure of manual valves to limit the amount of release. The line should be provided with a manual valve located in an easily accessible location as close to the outer tank wall penetration as the line routing permits.

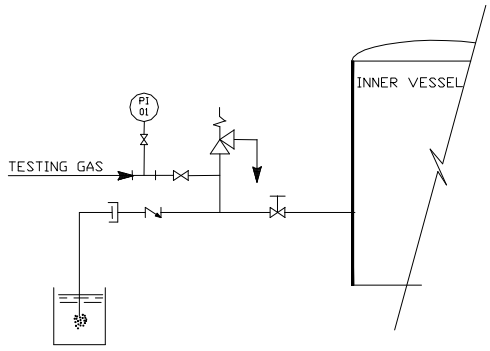

Figure 2 Emergency shutoff valves

Provision shall be made for operation of the emergency isolation valves at ground level from a safe point remote from the potential area of flow of leaking liquid. To improve personnel capabilities to actuate closure in emergencies, consideration should be given to provide multiple locations for emergency shut-off valves actuation. This decision should be based on plant staffing and the possibility of locating one actuation station in an area with a low probability of being influenced by a vapour cloud such as a normally manned control room. The locations of the operating points, their purpose and mode of operation shall be indicated by suitable notices. Additional requirements for unmanned plants are included in the AIGA 028, *Unmanned Air Gas Plants: Design & Operation* [25].

5.6 Foundations

5.6.1 General

The tank foundation shall be designed to withstand the weight of the tank and insulation, maximum design tank contents that could be experienced during operation of the tank , internal pressure, and other possible loads resulting from wind, snow, ice, earthquake, and/or water content during testing. Subsidence conditions should be considered where required by local conditions.

Suggested practices regarding foundations are included in Appendix C *Suggested Practice Regarding Foundations* of API 620 [13].

The flat bottom of the inner tank shall be thermally insulated from the foundation to ensure that the mechanical integrity of the foundations. The cellular glass insulation shall extend beyond the diameter of the inner tank annular plate sufficiently to allow for the distribution of the loads from the inner tank wall to the cellular glass. Usually this insulation is constructed from cellular glass blocks (foam-glass). The thickness of the cellular glass insulation between the inner and outer tank bases affects the temperature of the foundation pile cap. Consideration shall be given to the allowable temperature of the foundation pile cap and the acceptability of ice formation on the underside of the foundation pile cap when accepting a minimum thickness of cellular glass. If insufficient thickness is used, the foundation pile cap reinforcing bar could need to be stainless steel because of the low temperature.

Anchor bolts or straps shall be provided for the inner and outer tank and shall be cast in or pass through and be clamped to the underside of the foundation.

For tank bottoms and foundations in contact with the soil, foundation heating should be provided to prevent ground freezing and frost heave. For tanks supported above ground on a pilecap, a minimum air gap of 1 m is required to ensure adequate air circulation under the pilecap.

Where liquid storage tanks are required to be installed at an elevated level, they shall be supported by structures engineered for the purpose. Consideration should be given to protect such structures from damage by cryogenic liquid spillage.

The design of anchor/hold down straps for the inner and outer vessel and their attachment to the concrete foundation shall take into account the anticipated pull out loads to guarantee the mechanical integrity of the tank.

5.6.2 Base Insulation

Cellular glass insulation shall be subjected to compressive-load batch testing as specified in ASTM C240 *Standard Test Methods of Testing Cellular Glass Insulation Block* [26], EN 826 *Thermal insulating products for building applications - Determination of compression behaviour* [27] or equivalent method. These standard tests employ bitumen capping on the compression faces of single test blocks; the bitumen capping ensures even load distribution and minimizes cell crushing. The use of bitumen is prohibited in the insulation system for LOX/LIN/LAR tanks.

The standard batch tests do not address the mode of failure, failure displacements, and post-failure behaviour, which are of critical importance to the intended use of the product.

The exclusion of the bitumen adversely affects the load bearing capacity and amount of cell crushing, therefore alternative interleaving materials such as glass fibre cloth and/or inorganic powder can be employed to aid even-load distribution and minimize the amount of cell crushing.

The compressive load carrying characteristics of the selected cellular glass insulation system including any interleaving materials shall be established by carrying out compressive load tests (type approval test) that are representative of the actual system to be used. This shall include block on block testing with the selected interleaving on the load faces. The tests establish the effectiveness of the materials and the bearing capacity shall be reduced by that effectiveness.

A minimum safety factor of 2.5 against compressive collapse under normal design conditions, and a safety factor of 2.0 against compressive collapse under seismic loading shall be applied against the reduced allowable compressive strength.

The amount of crushing is a function of the cellular glass and the selected interleaving material. The amount of crush shall be establish during the type approval testing, allowing for this crushing shall be included in the tank interspace piping design.

5.6.3 Installation of cellular glass base insulation

The inner tank base insulation shall be installed on a level surface; this could require a levelling layer on the base of the outer tank. Installation shall be carried out under dry conditions. One possible method of construction is to substantially complete the outer tank, including the roof, but allowing for access to the inner tank and then complete the inner tank foundations. Although cellular glass will not adsorb water, the presence of water in the base insulation could result in ice damage to the cellular glass with the potential for settlement and anchor loosening in the event that the tank is warmed up in service. Also any ice in the base insulation can cause additional heat leak.

Any channels made in the cellular glass base insulation for anchor straps shall be filled with insulation, (for example perlite, mineral wool (ceramic fibre)). Such channels shall be sized and positioned to accommodate thermal movement of the inner tank that occurs upon cooldown.

Horizontal channels in the cellular glass for pipework shall run inside stainless steel bridging or box sections designed to fully support the inner tank floor loading. The pipe shall be centralized in the channel to permit thermal movement.

The inner tank bottom and sidewall shall not rest directly on the cellular glass, but shall have a concrete footing/levelling layer on top of the cellular glass blocks to spread the load and protect the cellular glass during floor construction. There shall be a metallic barrier (such as aluminium) between the concrete levelling layer and the top of the base insulation to act as a membrane to prevent moisture from the concrete entering the base insulation. Organic membranes such as polyethylene are not acceptable. In some cases, a concrete ring beam could be required under the sidewall. Any reinforcing bars in the concrete ring beam shall be stainless steel. During construction, the outer perimeter of the base insulation shall be protected from damage. The cellular glass blocks in each layer shall be laid side-by-side in rows, but successive layers shall be staggered in two directions (Figure 3) or layers shall be rotated by not less than 30 degrees. The use of pieces with plan dimensions less than half a block shall be avoided; this is particularly important at the edge of the cellular glass layer, which is the region with the highest loads.

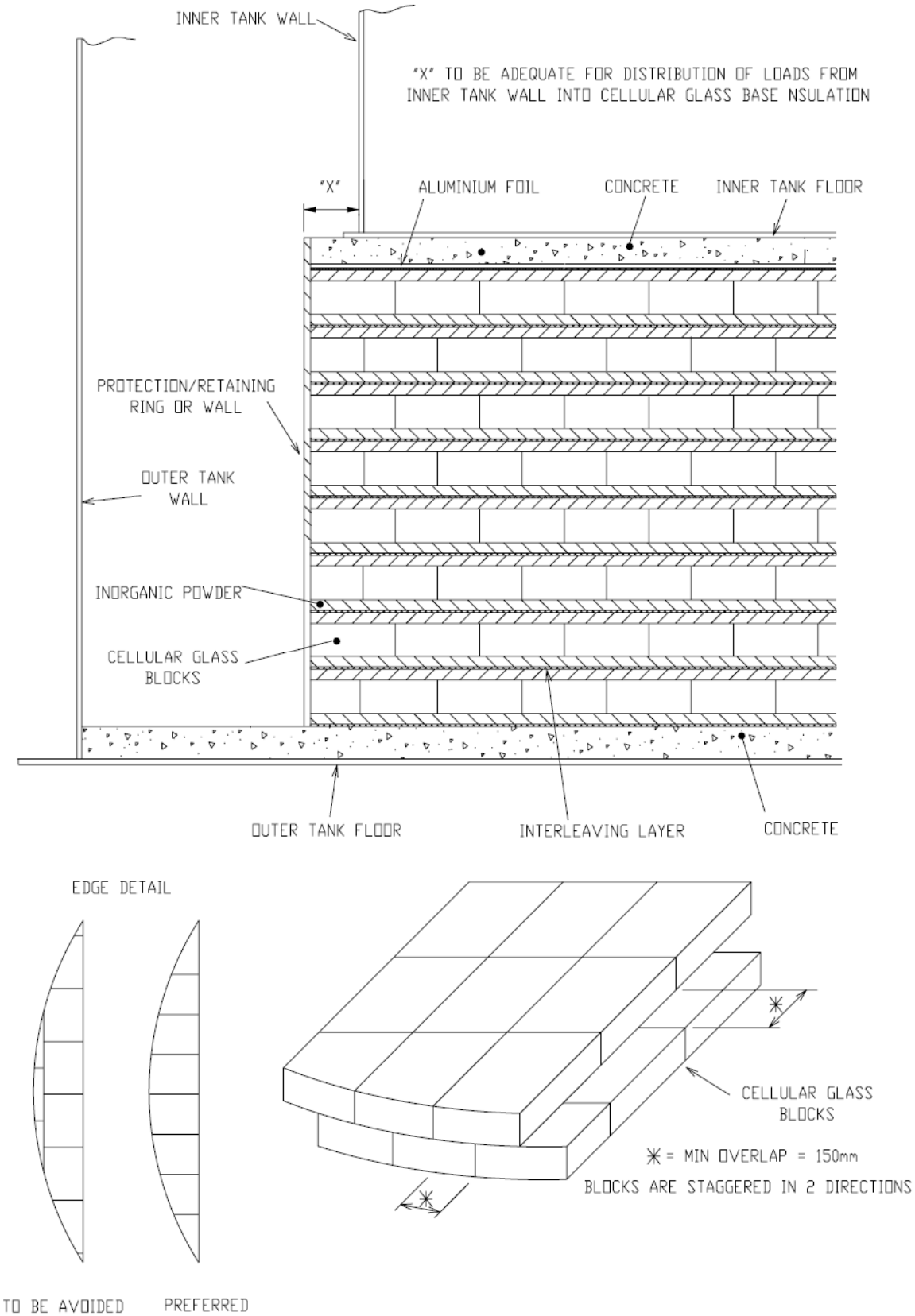

Fig. 3 Typical arrangement of base insulation

6 Storage tank fabrication

6.1 General

The fabrication at site of storage tanks and associated piping shall be in accordance with the requirements of the code and standards used for the design.

However requirements beyond those stated in the selected design code are required for the specific storage of LOX, LIN and LAR at production sites. Such requirements are stated in other sections of this document, for example the requirement for non-destructive testing of liquid lines penetrating the inner tank below the maximum liquid level are stated in 5.3.

Note: There can be additional requirements imposed by the user, local and or national regulations.

As a minimum the following shall be addressed during construction:

- workmanship;
- plate cutting and edge preparation;
- Plate forming / pressing;
- welding procedures (WPS);
- welding procedure qualification (PQR);
- production weld tests including impact testing;
- repairs of weld defects, and
- non-destructive testing in accordance with the design requirements.

All plates for the inner and outer tanks shall be handled and stored separately to ensure that materials are used in the correct application, for example to avoid carbon steel plates and stainless steel plates being interchanged.

Stainless steel shall be stored and handled to avoid surface contamination. Any contact with other metals such as zinc, (galvanized tools) and carbon steel shall be prevented to avoid the risk of weld defects and cosmetic defects.

Heating or hammering is not permissible unless the material is heated to a forging temperature during straightening.

Welding consumables shall be protected and stored in accordance with the conditions stated in the welding consumables standards and/or the supplier’s recommendations.

The workmanship and finish shall be subject to inspection by the manufacturer’s inspector, the purchaser may specify formal inspection activities, such as a quality plan.

During site erection, the erector shall ensure that the partially complete tank is secured against possible adverse weather conditions that can occur during construction. This could require the partially constructed tank to be capable of sustaining the design wind speed.

Fabrication tolerances for the inner and outer tank shall be in accordance with the design code and cover the following:

- plumbness of shell walls;
- out of roundness;
- shell radius;
- double curvature roof shape;
- local deviation from theoretical shapes such as flat spot;
- weld discontinuities, alignment of plate joints, and
- bottom plate local distortion.

A criterion for foundation levelness shall be specified by the designer.

If the design code does not specifically address bottom plate local distortion the following is recommended:

- Generally, the floors shall be in contact with the support surface below. Floor welding and sequencing of welding shall minimise floor distortion to avoid lifting and reseating of the floor during liquid level fluctuations. This is not specifically addressed by API 620, [13];
- The integrity of the inner-tank anchor system is critical. All load-carrying weld joints in the inner-tank anchor system shall be 100% non-destructively tested. This shall be accomplished by radiography when possible. Load-carrying fillet welds shall be made with a minimum of two passes and shall be subject to dye penetrant examination;
- Inner-tank anchorage, (for example, anchor straps, bolts, rods), shall be provided by the tank supplier to be set in the concrete foundation. When required to facilitate installation and to provide clear access to the concrete foundation, the anchor straps may be supplied in two pieces requiring a field weld above the concrete foundation. This field weld is critical to the integrity of the tank and shall be full penetration weld and fully radiographed.

6.2 Storage and cleanliness of materials at erection site

Hazards of oil, grease, combustible materials and other foreign matters in presence of oxygen are addressed in 4.5.

All plates and materials to be used for the construction of the inner vessel and related piping shall be handled and stored in such a way that the possibility of their contamination is minimized.

Equipments and parts (like valves, instrument, pipe spools, etc) supplied already “clean for oxygen service” shall be handled and stored in their original sealed packing until their installation.

At the end of the fabrication of the tank and related piping all the parts to come into contact with oxygen shall be verified for cleanliness and if necessary accurately re-cleaned “for oxygen service”.

For practical guidance on how to prepare equipment for oxygen service see AIGA 012, *Cleaning of equipment for oxygen service* [9].

6.3 Inspection and testing during the fabrication

Inspection is required to ensure that the tank construction is of the required standard as specified in the applicable design codes and this document. The party responsible for carrying out the inspection shall have the experience as defined in the selected code.

7 Site selection and layout of installation

7.1 General

The strict adherence to nationally accepted design and construction codes for pressure vessels, storage tanks and associated equipment, and to the specific operating instructions should ensure the safe operation, and the prevention of accidental releases.

The installation shall be sited to minimise risk to personnel, local population and property. Consideration shall be given to the location of any potentially hazardous processes in the vicinity which could jeopardize the integrity of the storage installation.

Equipment, associated instrumentation and manually operated valves shall be located to provide unrestricted access and clear visibility of instruments.

An installation may, because of its size or strategic location, come within the scope of specific legislation for planning control. If so, the siting of any such proposed installation shall be discussed and agreed with the local authority.

Where there is considered to be off site risks, a risk assessment shall be carried out which can require the addition of mitigating measures, such as barriers, curbing and diking. The risk assessment shall take into account proximity of occupied buildings, areas of public assembly and, other vulnerable site equipment (particularly other storage tanks), and prevailing climatic conditions (high humidity, atmospheric corrosion).

Preferably, tanks should be located so that diking or other means of secondary containment are not required.

7.2 Safety distances

Safety distances are intended to protect the storage installation as well as personnel and the environment. They are intended to protect personnel from exposure to an oxygen enriched or deficient atmosphere or from cryogenic burns in the event of a release of liquid, to prevent fire enhancement due to a release of liquid oxygen, and to protect the installation from the effect of thermal radiation or jet flame impingement from fire hazards.

Within a number of countries of operation there are specific requirements for separation distances between cryogenic storage and exposure hazards. Examples of documents that give specific distances include NFPA 55 *Compressed gases and cryogenics fluids code* [28], BCGA CP 20, *Bulk Liquid Oxygen Storage at Productions sites* [1] and BCGA CP 22, *Bulk Liquid Argon or Nitrogen Storage at Production sites* [2].

It is not practicable to define safety distances which alone give adequate protection in the event of a major release of liquid from storage installations. They have to be adopted in conjunction with a package of precautions to control spillage and minimize risk, such as:

- taking into account topography, containment or diversion of spillage;
- siting of storage to allow for likely movement of vapour clouds;
- provision of emergency isolation valves; implementation of emergency procedures (section 10.4);
- adequate personnel training.

To minimize the off-site risk to the general public and the environment it is necessary for each of the likely risks and exposures to be considered individually.

7.3 Location of the installation

7.3.1 Outdoor Installation

All cryogenic bulk liquid storage installations at production sites shall be located outside in a well-ventilated area.

7.3.2 Location of underground cable ducts, trenches, drains and open pits

Underground cable ducts, trenches, drains and open pits should not be located close to bulk storage tanks. This is to avoid confined spaces where oxygen enrichment and, or depletion could occur and potential pathways for leakage from the tank to travel unintentionally to other areas (see 7.3.6 Diversion of spillage). Debris accumulated in cable ducts, trenches, drains and pits can also pose fire hazards with leaking oxygen.

Equipment requiring regular attention or maintenance should not be installed in pits. Flanged joints and similar sources of potential leakage should also be avoided in pits. Where the installation of equipment and/or the inclusion of potential sources of leakage in pits cannot be avoided notices shall be posted nearby, warning of the hazards of oxygen enrichment or deficiency. Entry into such locations shall be controlled by a confined space entry procedure.

7.3.3 Protection against electrical hazards

The location shall be chosen so that damage to the installation by electric arcing from overhead or other cables cannot occur. All parts of the installation shall be earthed and protected against lightning according to local regulations. Storage tanks shall be grounded in at least one location. The inner vessel is grounded to the outer vessel by various piping connections. Grounding clips should be austenitic stainless steel or protected against corrosion.

7.3.4 Electrical equipment

Applicable local codes shall be followed. The storage tank area is not considered a hazardous location for electrical equipment therefore, suitable weatherproof types of electrical wiring and equipment are acceptable. In areas where high oxygen concentrations could be expected in normal operation, electrical equipment with open or unprotected make-and-break contacts should be avoided.

Lighting shall be provided to allow operations to be carried out safely. Emergency lighting shall be provided.

7.3.5 Management of liquid spillage

The slope of the ground shall be such as to provide normal surface water drainage and direct any cryogenic liquid leaks towards safe areas. Liquid spillage shall be prevented from reaching sensitive areas such as control rooms, offices, workshops canteens, electrical equipment, machines, natural gas fire heaters, trenches, neighbours, public areas, This consideration shall be taken into account during the development of the overall plot plan.

Significant liquid spillage can occur due to piping or equipment failure external to the storage tank or tanks. Provisions shall be made to contain or divert it towards a safe area. Hydrants, hoses, spray nozzle or fans may be used as required to divert liquid and protect vulnerable areas

Storm water drainage systems shall be provided with water traps or other safeguards to prevent the ingress of cryogenic liquid or gaseous products.

7.3.6 Position of gas vents

Vents, including those from safety relief devices, shall vent to a safe location, so as to avoid hazards to personnel, buildings, structural steelwork or other equipment.

Vent discharge pipes shall be routed to a location and elevation that minimises fogging and provides for atmospheric dispersion to avoid localized oxygen enrichment or deficiency in areas frequented by operating personnel. Dispersion modelling can be a useful tool in locating vent discharge points.

Vent pipes from relief and vent devices shall be directed away from the outer tank or sufficiently elevated to avoid contact with carbon steel which could lead to cold temperature embrittlement.

Atmospheric moisture accumulation in potential cold vent lines shall be avoided to prevent icing hazards or water accumulation. A dry gas purge installed on vent discharge piping has been proven to be an effective counter measure; another method could be drainage holes at low points. This drain opening should be inspected periodically to ensure that it is not plugged.

7.3.6.1 Pressure relief devices

Pressure relief device operation does not typically provide a constant source of either cold gas or icing. On bulk storage tanks, the pressure relief devices are typically located on the top of the outer tank shell or vented at a high elevation, which minimises fogging at grade.

The relief device inlet piping shall be designed to prevent cold migration to the device body during standby conditions and prevent it from becoming encased in ice.

Design of relief device outlets should consider methods such as installation of screens or blow-off caps to prevent birds or debris from entering the outlets and causing a possible blockage of relief device flow. Screen designs should not restrict the required flow area.

Periodical inspection of the relief vent piping may be performed as an alternative to screen installation to ensure that the discharge is not blocked.

A visual inspection of the outside of the relief devices should be made on a periodic basis to ensure they are free of ice. If the relief device body is encased in ice then the following actions shall be taken:

An inspection should be made of the internal surfaces of the relief devices discharge nozzle (plug & stem, in the case of a relief valve) via the outlet piping. The intent of the inspection is to ensure that the relief device discharge is free of ice. The inspection shall be conducted considering human factors and process risks.

A visual inspection of the relief device discharge is recommended via indirect observation such as by camera or inspection mirror.

If ice is found on the discharge of the relief device then mitigation measures shall be applied to prevent ice formation.

7.3.6.2 Automatic vent valves

The automatic vent valve discharge should be located sufficiently above grade to provide adequate atmospheric dispersion to dilute the gas to a safe concentration and to warm the gas to prevent fogging before it settles to operating personnel levels.

Since the exiting vent gas will cool the discharge vent piping tip to near vent gas temperature, the tip should be insulated or heated to prevent ice build-up. The ice could result in blockage of the tank nozzles or malfunction of the control valves or creation of a large ice-ball that could fall off and injure operating personnel, and therefore could require periodic thawing. Cyclic thawing of the vent valve ice build-up may cause a safety concern for personnel or equipment damage from falling ice. The heating device shall be suitable for cryogenic service and for the vented gas. An alternative to heating the tip may be to place a catch grating below the vent or to limit access to the area beneath the vent.

7.3.7 Vapour clouds

When siting the installation, consideration shall be given to the possibility, direction and velocity of vapour clouds, originating from spillage or venting, which could result in an on-site or off-site hazard (decreased visibility, oxygen enrichment or deficiency). Dispersion modelling is a useful tool in assisting in the optimal location of storage tank systems.

Installation of temporary or permanent barriers to control the spread of vapour clouds off-site may be considered. Barriers can provide additional time for implementation of site emergency response procedures before the vapour cloud travels off site.

7.3.8 Fire fighting equipment

Local regulations will normally dictate the type and quantity of the fire fighting equipment (extinguishers, fire hoses, etc) required for the installation.

7.4 Liquid transfer area

For details about the requirements for installations used for the loading of oxygen, nitrogen or argon into trailers see AIGA 085, *Liquid oxygen, nitrogen and argon cryogenic tanker loading system guide* [3].

8 Testing and commissioning

8.1 Controls during manufacturing and construction

The manufacturing shall be subject to specification and a quality plan agreed by the fabricator and customer. This shall include all the tests prescribed by the applicable codes and any additional requirements prescribed by the designer. Guidance on such requirements is given in API 620 section 7, *Inspection, Examination and Testing* and Appendix Q *Low-Pressure Storage Tanks for Liquefied Gases at -325 °F or Warmer*. [13].

8.2 Testing, pre-commissioning checks and commissioning of installations

8.2.1 General

Prior to testing and commissioning, a review shall be carried out to ensure that the tank and associated equipment have been designed and constructed in accordance with the design code and specification, and that all statutory requirements have been met.

Prior to placing into service, the installation shall be validated as suitable for the intended duty. This validation shall be performed by a competent person that shall have practical and theoretical knowledge and experience of the type of storage tank installation being examined.

Checks shall be made to ensure that the cleanliness requirements of 6.2 have been met.

As a minimum, the following tests shall be carried out by the supplier or their representative in accordance with approved procedures.

8.2.2 Tank pressure and leak testing

It should be noted that a hydro-pneumatic test is a test of the material strength, and that a leak test, which is performed at a lower pressure than the hydro-pneumatic test, using a gas, is for the purpose of detecting leaks which have not been found during the hydro-pneumatic test.

A hydro-pneumatic test of the inner vessel shall be carried out in accordance with the applicable design codes and standards before filling the annular space with insulation.

Means of pressure indication suitable for the test pressure shall be installed before the test and precautions shall be taken to prevent over pressure in the system during the test.

Water to be used for the hydro-pneumatic test shall be analysed prior to filling of the tank(s). To prevent the risk of pitting, cracking or corrosion of the material used in the construction of the tank, the chloride contents (chlorine ion) shall be lower than 50 mg/l with a pH between 6 and 8.3 or more stringent if required by the tank manufacturer. The test water shall only remain in the tank for the shortest time required for the test. In case it is impossible to obtain the requested water quality, alternative test methods that utilize suitable inhibitors may be agreed between the designer, manufacturer and owner of the tank. Water shall be substantially clean and clear.

WARNING: *if the tank is designed for liquid nitrogen only, the maximum level of water filling shall be verified not to exceed the maximum allowable stress in test condition of the foundation and of the bottom cellular -glass insulation*.

After the tank is filled with water and before the pneumatic pressure is applied the foundation straps shall be welded to the inner vessel.

Vents to atmosphere shall be checked to avoid both over-pressurization and the development of a partial vacuum in the tank during the filling and emptying of the tank. Immediately after the test, the tank and any associated equipment shall be drained. The bottom surface of the inner tank shall be rinsed with clean water and thoroughly dried out and checked for any residual water remaining in pockets.

Upon completion of the hydro pneumatic test a thorough visual inspection shall be made of both the inside and outside of the inner vessel and the anchorage.

There shall be a disposal plan for the test water to ensure that the local drainage system can cope with the rate of water disposal and that the water quality will not negatively impact the local environment and complies with any local regulations.

For the hydro-pneumatic test dry oil-free air is the preferred test medium. The pressure in the system shall be increased gradually up to the test pressure. Any defects found during the test shall be rectified in accordance with the requirements of the design and fabrication code and the system retested.

WARNING: *If nitrogen is used to perform a pneumatic test or to keep the tank pressurized a risk of asphyxiation exists inside and around the vessel (see 4.2).*

The pressure test shall be witnessed and a test certificate signed and issued. The certificate shall be retained in the plant files.

Upon successful completion of the pressure test of the tank, the tank and associated equipment shall be leak tested. Equipment such as plant instruments and gauges are not normally fitted during the pressure test but shall be fitted prior to pressurising for leak testing.

If the tank is designed for partial vacuum, then the test shall be performed in accordance with API 620,[13], or other equivalent design codes.

8.2.3 Pre commissioning checks

A pre-startup safety review shall be conducted to ensure that all materials and design requirements have been verified. Below are some areas (not exhaustive list) that shall be addressed in this review.

8.2.3.1 Pressure and under pressure relief devices

A check shall be made to ensure that all transport locking devices have been removed from both over and under pressure relief devices for the inner vessel, outer tank and piping systems and that the devices are undamaged and in working order. If safety valves are provided with locking screws they shall be removed prior to commissioning.

The relief device set pressure (stamped on or attached to each device) shall be checked to see it is in accordance with the maximum allowable working pressure of the tank. Relief valves shall be subjected to a functional test and the results documented.

8.2.3.2 Relief device discharge lines

A check shall be made to ensure that all relief valve and bursting disc discharge lines are routed to a safe location and that the valves and discharge lines are supported to take into account reaction forces.

8.2.3.3 Instrumentation and controls, safety systems

Check that instrumentation and controlling devices and safety systems comply with the design specifications. This shall include a functional test and the results documented and maintained in the plant file.

8.2.3.4 Signage

Signage shall be installed before placing the installation into service. Notices shall be clearly displayed at all times on or near the tanks, particularly at access points, to indicate the following:

- LIQUID OXYGEN (or NITROGEN or ARGON)
- NO SMOKING
- NO HOT WORK
- NO NAKED LIGHTS
- NO STORAGE OF OIL, GREASE OR COMBUSTIBLE MATERIALS
- AUTHORIZED PERSONS ONLY

Symbols may be used instead of written notices that are in accordance with local regulations.

8.3 Commissioning

Commissioning shall be carried out only by authorized personnel and in accordance with a written procedure. Procedures shall be established to check the operational readiness and the integrity of systems before they are brought in to service and that personnel are trained before start up.

Whenever initial cooling down of the tank is performed (either from road tankers or from the production air separation unit) at no time shall the positive pressure or the negative pressure in the inner vessel and in the annular space exceed the maximum or minimum allowable values indicated in the manufacturer's documents. The pressure in the annular space shall never exceed the actual pressure in the inner tank to avoid lifting of the tank flat bottom.

The cooldown shall be carried out in accordance to an approved procedure which limits the liquid flow to control the thermal stresses and pressure build-up in the inner vessel due to liquid flashing in the warm tank.

9 Operation and maintenance

9.1 Operation of the installation

Documented operating instructions shall be supplied to operating personnel.

The instructions shall define the safe operating limits of the system and any procedures that are required to operate the system in an emergency situation. The operating instructions shall include any

actions required to be taken in response to an excursion outside the design limits of the system (for example; overpressure, rapid temperature change, mechanical damage). Example of an action required could be to report the excursion to the company design specialist for any remedial action.

9.2 Hot work

Hot work and open fires shall be prohibited near oxygen installations unless specific precautions are taken (see 10.1).

9.3 Periodic inspection and maintenance

9.3.1 General

Periodic inspection and maintenance of the storage systems (excluding inner tank and annular space) shall be carried out to ensure that the installation remains in a safe condition. The scope and time interval for the inspection, maintenance and repair shall be established by the user in consultation with the manufacturer, applicable regulations and local authorities as appropriate.

The site should be inspected regularly to ensure that it is maintained in an appropriate condition for the type of installation and that safety distances are respected.

A comprehensive installation dossier shall be available; this dossier shall include:

- process and instrumentation diagrams;
- vessel or tank dossier;
- operating instructions.

Equipment shall not be taken out of service for repair until all pressure has been released. Any leakage shall be rectified promptly and in a safe manner. Only original spare parts should be used. If this is not possible the suitability of the spare part shall be approved by a competent person through a management of change process. The management of change process is described in AIGA 010, *Management of Change* [22].

The maintenance and assembly of equipment for oxygen shall be carried out in clean, oil free conditions. All tools and protective clothing (such as overalls, gloves and footwear) shall be clean and free of grease and oil.

For practical guidance on cleanliness for oxygen service see AIGA 012, *Cleaning of equipment for oxygen service* [9].

9.3.2 Tank

Periodic inspection or test of the inner tank is not considered necessary because of:

- dry and clean service conditions
- product are non-corrosive
- enhanced material properties at low temperatures
- dry, inert atmosphere purge space

For additional information see BCGA CP-25 *Revalidation of Cryogenic Static Storage Tanks* [29].

When a tank is taken out of service for modification or maintenance, the accessible areas of the tank should be examined by a competent person.

An annual external visual examination should also be carried out to confirm that the outer shell, exposed pipe-work, valves and controls do not indicate any defects. Where defects are found they shall be investigated and rectified.

The supply of purge gas to tank annular space should be checked periodically to ensure an effective purge is being maintained. Failure of a purge could lead to moisture accumulation in the annular space of a flat bottom storage tank and lead to ice formation, which degrades the insulation, limits piping movement, and potentially causing pipe damage.

Tanks located at ground level typically have foundation heaters. If the heaters do not have fault alarms then the heater shall be checked periodically to verify that it is operational.

9.3.3 Pressure relief devices

A periodic test of each relief valve shall be carried out to demonstrate its fitness for a further period of service. Pressure relief valves shall be tested in accordance with individual company standards or local regulations. If none exist a 3 year interval between tests could be considered as a starting point to develop a company specific requirement. .

Bursting disc elements can deteriorate with time resulting in their relief pressure rating being reduced. It may, therefore, be necessary to replace disc elements from time to time.

Where block valves are installed upstream of pressure relief devices to allow their inspection with the tank in operation, specific locking systems and operational procedures shall exist to assure that the safety devices are not isolated after the testing. At least one safety device shall be kept in operation during the testing of the second one.

All pressure relief devices in cryogenic service should be inspected periodically for external ice accumulation. Accumulated ice should be removed promptly. Failure to do so can prevent the pressure relief device from operating in accordance with the design requirements.

9.3.4 Level indication and overfill protection

Overfill protection alarms or shutdown systems can be inactive for long periods and can develop undetected faults.

Hence the liquid level measurement system and the overfilling protection system shall be tested according to the safety integrity level (SIL) analysis requirements. If a SIL analysis is not available then the test shall be done at least every 2 years. This test shall confirm operability of the entire system including actuation of the shutdown device at the appropriate design set point and closure of the isolation valves in each tank liquid inlet line.

9.3.5 Emergency isolation valves

Periodic checks shall be made to ensure that any emergency isolation valves are operating and any flow from the closed emergency isolation valve is acceptably small. The emergency shut-off valves and/or check valves installed to reduce the possibility of continuous liquid releases from the storage system should be tested at an interval no longer than every 2 years. The test for remotely operated emergency shut-off valves shall confirm valve closure from all actuation points. For check valves the test shall confirm the valve’s capability to prevent significant liquid back flow through a failed line.

9.4 Modifications and change of service

Proposed modifications or change of service to a storage tank, its equipment, control systems, process conditions and operating procedures shall be evaluated for safety, health and environmental impact and approved prior to any change being made. The approval shall be carried out under a management of change procedure; see AIGA 010, *Management of Change* [22].

Any modification shall be carried out in accordance with the applicable design code; some modifications could require consultation with the supplier.

9.4.1 Change of service

Change of service can be a very complex process and it shall only be done after a full engineering review. Key items that shall be addressed during change of service review are but not limited to:

- Load on tank design and foundation
- Calibration of the level instruments and alarm and trip set points. Ensuring layers of protections are not lost.
- Impact of gas density and temperature changes:
- Review of process calculations for new relief device and vent valve duties.

- Oxygen compatibility for conversion to liquid oxygen service:
- Ensuring tanks and other components are cleaned for oxygen service
- Ensuring piping and components are suitable for oxygen service

10 Training and protection of personnel

10.1 Work permit

Before maintenance or modifications are carried out on the installation a written work permit for the work (cold work, hot work, entry of vessel, electrical work etc.) shall be issued by an authorized person to the individual(s) carrying out the work. See AIGA 011, "*Work Permit Systems*" [30].

10.2 Entry into tanks

Both the inner tank and annular space are confined spaces and formal Confined space entry procedures shall be followed; see CGA SB-15 *Managing Hazards in confined work spaces during maintenance, construction and similar activities* [31].

Particular hazards of note are:

- perlite;
- cold surfaces; and
- oxygen enrichment / deficiency.

10.3 Training of personnel

Recommendations about training of personnel are described in AIGA 009, *Safety training of employees* [32].

All personnel directly involved in the commissioning, operation and maintenance of storage systems shall receive specific training as required in the operation and maintenance of the equipment. It is recommended that the training be carried out under a formalised system and that records be kept of the training given.

Training shall cover, but not necessarily be confined to the following subjects for all personnel (for suggested lists see AIGA 009 [32]):

- potential hazards of the cryogenic fluids
- oxygen enrichment / depletion
- site safety regulations
- emergency procedures
- use of protective clothing

For additional information about selection of personal protective equipment see AIGA 066, *Selection of personal protective equipment* [33].

10.4 Emergency procedures

Emergency procedures shall address cryogenic fluid spills. These procedures shall be developed in coordination with emergency services or fire brigade; see also EIGA Safety Info HF06 *Organisation of Site Emergency Response* [34].

The procedures shall be readily available to all personnel involved, regularly practised and checked periodically that they are up to date. Employees likely to be affected shall know the actions required to minimise the adverse effects of such spillage.

The procedure shall consider:

- the properties of the cryogenic fluids;
- the quantities involved; and

- the local topography;

The following are guidelines which should be used for formulating emergency procedures:

- raise the alarm
- summon help and emergency services
- notify fire brigade immediately (if necessary)
- evacuate all persons from the immediate danger area and seal it off
- in case of leakage/spillage:
  - tighten up leaks if this can be done without risk;
  - allow liquid to evaporate
  - prevent liquid entering sewers, pits, trenches
- in case of fire:
  - keep vessel cool by spraying it with water
  - do not spray water directly on relief valves or safety equipment
- alert public to possible dangers from vapour clouds and evacuate when necessary

11 References

For AIGA publications refer to:
Asia Industrial Gases Association, 3 HarbourFront Place, #09-04 HarbourFront Tower 2, Singapore 099254. www.asiaiga.org

For EIGA documents refer to:
European Industrial Gases Association, 3-5, avenue des Arts, 1210 Brussels. www.eiga.eu

For CGA publications refer to:
Compressed Gas Association, Inc., 14501 George Carter Way, Suite 103, Chantilly, VA 20151. www.cganet.com

Unless otherwise specified, the latest edition shall apply.

[1] BCGA CP 20, *Bulk Liquid Oxygen Storage at Productions sites;* British Compressed Gases Association, 4A Mallard Way, Pride Park, Derby DE24 8GX www.bcga.co.uk

[2] BCGA CP 22, *Bulk Liquid Argon or Nitrogen Storage at Production sites;* British Compressed Gases Association, 4A Mallard Way, Pride Park, Derby DE24 8GX www.bcga.co.uk

[3] AIGA 085, *Liquid Oxygen, Nitrogen and Argon Cryogenic Tanker Loading System Guide*

[4] CGA G-4.3 *Commodity specification for oxygen*

[5] CGA G-10.1 *Commodity specification for nitrogen*

[6] CGA G-11.1 *Commodity Specifications for argon*

[7] AIGA 005, *Fire hazards of oxygen and oxygen enriched atmospheres*

[8] AIGA 008, *Hazards of inert gases*

[9] AIGA 012, Cleaning of equipment for Oxygen service

[10] CGA P-12, *Safe Handling of Cryogenic Liquids*

[11] AIGA 032, *Perlite Management*

[12] API 625 *Tank Systems for Refrigerated Liquefied Gas Storage;* American Petroleum Institute, API Publishing Services, 1220 L Street, NW, Washington, DC 20005, www.api.org

[13] API 620 *Design and Construction of Large, Welded, Low-pressure Storage Tank*; American Petroleum Institute, API Publishing Services, 1220 L Street, NW, Washington, DC 20005, www.api.org

[14] ASME B31.3 *Process Piping*; American Society of Mechanical Engineers, Three Park Avenue New York, NY 10016-5990, www.asme.org

[15] BS 7777 *Flat bottomed, vertical, cylindrical storage tank for low temperature service;* British Standard Institute, 389 Chiswick High Road London W4 4AL United Kingdom, www.bsigroup.com

[16] EN 14620 *Design and manufacture of site built, vertical, cylindrical, flat-bottomed steel tanks for the storage of refrigerated liquefied gases with operating temperatures between 0°C and -165°C;* CEN European Committee for Standardization, rue de Stassart 36 , B-1050 Brussel

[17] DIN 4119 *Above-ground cylindrical flat-bottom tank structures of metallic materials*; DIN Deutsches Institut für Normung e. V., Am DIN-Platz Burggrafenstraße 6 - 10787 Berlin Germany www.din.de

[18] AD 2000 Merkblatt B6 *Cylindrical shells subjected to external overpressure;* Beuth Verlag GmbH - Am DIN-Platz Burggrafenstraße 6 10787 Berlin www.ad-2000-online.de

[19] DIN 18800 *Structural Steelwork* DIN Deutsches Institut für Normung e. V., Am DIN-Platz Burggrafenstraße 6 - 10787 Berlin Germany www.din.de

[20] API 650 *Welded steel tanks for oil storage*; American Petroleum Institute, API Publishing Services, 1220 L Street, NW, Washington, DC 20005, www.api.org

[21] API 2000 *"Venting Atmospheric and Low-Pressure Storage Tanks: Non refrigerated and Refrigerated*; American Petroleum Institute, API Publishing Services, 1220 L Street, NW, Washington, DC 20005, www.api.org

[22] AIGA 010, *Management of Change*

[23] API 521, *Pressure Relieving and Depressuring Systems (Note equivalent to ISO 23251)*

[24] AIGA 055, *Installation Guide for stationary electric motor driven liquid oxygen centrifugal pumps.*

[25] AIGA 032, *Unmanned Air Gas Plants: Design & Operation*

[26] ASTM C240 *Standard Test Methods of Testing Cellular Glass Insulation Block;* ASTM International, 100 Barr Harbor Drive, PO Box C700, West Conshohocken, PA, 19428-2959 USA, www.astm.org

[27] EN 826 *Thermal insulating products for building applications - Determination of compression behaviour;* CEN European Committee for Standardization, rue de Stassart 36 , B-1050 Brussel

[28] NFPA 55, *Compressed gases and cryogenics fluids code*, National Fire Protection Association, 1 Baterrymarch Park, PO Box 9101, Quincy MA 02269-9101 USA www.nfpa.org

[29] BCGA CP 25, *Revalidation of Cryogenic Static Storage Tanks;* British Compressed Gases Association, 4A Mallard Way, Pride Park, Derby DE24 8GX www.bcga.co.uk

[30] AIGA 011, "*Work Permit Systems*

[31] CGA SB-15 *Managing Hazards in confined work spaces during maintenance, construction and similar activities*

[32] AIGA 009, *Safety training of employees.*

[33] AIGA 066, *Selection of Personal Protective Equipment*

[34] EIGA Safety Info HF06 *Organisation of Site Emergency Response*

[35] CGA S-1.3 *Pressure Relief device standards*

[36] EIGA Doc 24 *Vacuum insulated cryogenic storage tank systems pressure protection devices*

Annex A - Specific requirements for cluster storage tanks

A cluster storage tank is a system of multiple inner pressure vessels (or tanks) in a single outer jacket. Usually the inner vessels are workshop manufactured and installed inside the site erected outer jacket. These vessels typically operate above 1 bar g pressure and are designed as pressure vessels.

The inner vessels are piped together without intermediate manual or automatic isolation valves. All liquid lines of 50 mm (2 inch) nominal bore or greater that exit the outer jacket shall have emergency shut off valves capable of being remotely operated in emergency situations to isolate spills from failed external piping.

Such emergency shut-off valve (ESV) is additional to any normal isolating valve required for process operation (for example to isolate a transfer pump). A manual isolation valve should be installed immediately upstream of the ESV for maintenance of the ESV and downstream components.

The vapour spaces are manifolded together without valves and the inner tank over/under pressure protection devices are provided for the common system.

The inner vessels may be designed for full vacuum in which case the cluster may not require under pressure control and protection.

It is the responsibility of the designer to identify the parts of this document that are not applicable to the specific installation.

Annex B - Specific requirements for vacuum insulated storage tanks (VIT)

Large capacity vacuum insulated storage vessels are often used for bulk storage at production sites. They are typically shop fabricated and built to pressure vessel design code.

All liquid lines of 50 mm (2 inch) nominal bore or greater shall have emergency shut off valves capable of being remotely operated in emergency situations to isolate spills from failed external piping.

Such emergency shut-off valve (ESV) is additional to any normal isolating valve required for process operation (for example to isolate a transfer pump). A manual isolation valve should be installed immediately upstream of the ESV for maintenance of the ESV and downstream components

It is the responsibility of the designer to identify the parts of this document that are not applicable to the specific installation.

Inner tank and outer jacket pressure and vacuum protection shall be in accordance with the provisions of CGA S-1.3 *Pressure Relief device standards* [35] or EIGA Doc 24 *Vacuum insulated cryogenic storage tank systems pressure protection devices* [36].